FIXING SQUARE KIT

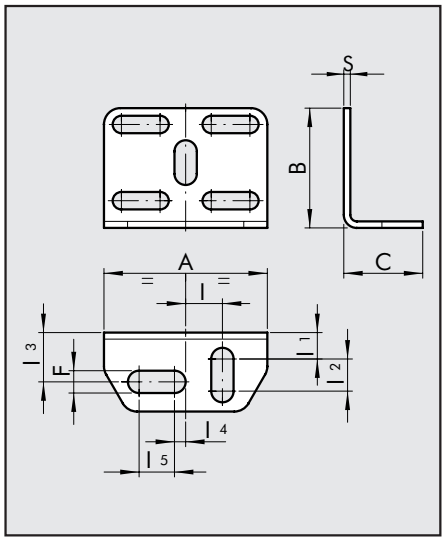

Code	Description	A	B	C	F	I	I1	I2	I3	I4	I5	S
9062110	SQU L	30	22	14.5	4.2	6.8	4.8	5.9	9.1	2	6.5	1.2

NOTE: comes with two m3x16 screws (for L.O.L. Ø 6 - 8), two m3 hexagonal nuts, 2 groovers, 4 washers.

U-BOLT

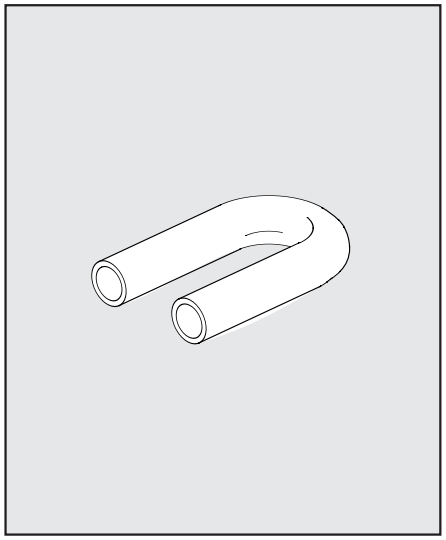

Code	Description
9062216	TUB L 6-6
9062224	TUB L 8-8

NOTES